IN HOUSE ASSEMBLY TEMPLATE

MOBILE LAB UNITS

4101, 4401, 4741, 4751, 4701, 4901, 5201, & 5301 SERIES (OAK OR MAPLE)
ASSEMBLY INSTRUCTIONS

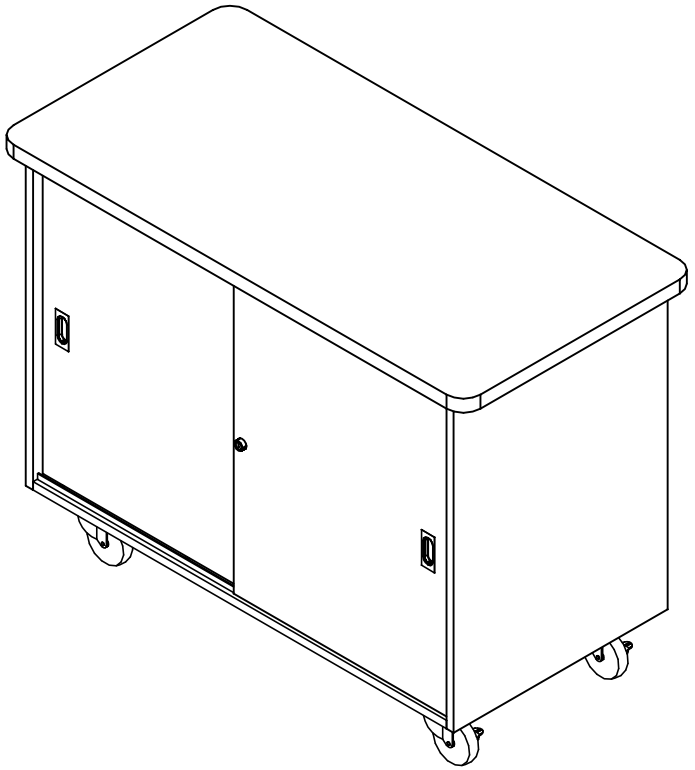

NOTE:

1. MODEL VIEWS MAY NOT REPRESENT EXACT MODEL PURCHASED

REV.	DESCRIPTION	DATE	NAME	ECN NO.
A	CREATED ASSEMBLY INSTRUCTIONS	1/29/18	EMK	-
REVISION LEVEL				

ALL DIMENSIONS ARE IN INCHES UNLESS NOTED OTHERWISE	DWN BY: EMK	DATE DWN:	1/29/18
CABINET SQUARENESS = ± .0625 FRACTIONAL VALUES = ± 1/32" - ALL VALUES ± OVERALL -	APR BY:	DATE APR:	
	APR BY:	DATE APR:	

CONFIDENTIAL:
ALL DESIGN RIGHTS RESERVED
THE INFORMATION, DATA, DESIGN, AND DRAWINGS EMBODIED IN THIS DOCUMENT AND ALL REPRODUCTIONS THEREOF ARE THE EXCLUSIVE PROPERTY OF DIVERSIFIED WOODCRAFTS, INC.

THESE DOCUMENTS ARE SUPPLIED WITH THE UNDERSTANDING THAT THEY WILL NOT BE DISCLOSED TO THIRD PARTIES WITHOUT WRITTEN CONSENT OF DIVERSIFIED WOODCRAFTS, INC. ANY REPRODUCTION IN PART OR WHOLE WITHOUT WRITTEN CONSENT IS SUBJECT TO LEGAL ACTION.

TITLE:
MOBILE LAB UNITS
ASSEMBLY INSTRUCTIONS

DRAWING NUMBER:	SCALE:	SHEET:	REVISION:
MOBILE LAB UNITS	NTS	1 OF 7	REV A

IN HOUSE ASSEMBLY TEMPLATE

TOOLS REQUIRED
½" WRENCH
ADJUSTABLE PLIERS
SCREW DRIVER

ASSEMBLY COMPONENTS

ITEMS INCLUDED	PART #	PART DESCRIPTION	QTY
CASTERS	100081	CASTER,4IN SWIVEL TOP PLATE, W/BRAKE	4
CASTER HARDWARE KIT	206509	CASTER,ASSY,HDWRE,16-SCREWS, 16-NUTS	1
SHELF CLIPS	100027	SHELF CLIPS,PLASTIC,5MM PIN	VARIES
TOTES	100135	TOTE TRAY, T-188	VARIES
MICROSCOPE DIVIDERS	100995	MICROSCOPE DIVIDER,ZINC	VARIES

NOTE:

1. COMPONENTS VARY WITH STYLE OF MOBILE CABINET PURCHASED.
2. **XX** INDICATES ITEMS THAT MAY NOT COME WITH UNIT (DEPENDING ON MODEL PURCHASED).

REV.	DESCRIPTION	DATE	NAME	ECN NO.
A	CREATED ASSEMBLY INSTRUCTIONS	1/29/18	EMK	-

REVISION LEVEL

ALL DIMENSIONS ARE IN INCHES UNLESS NOTED OTHERWISE

CABINET SQUARENESS = ± .0625
FRACTIONAL VALUES = ± 1/32"
- ALL VALUES ± OVERALL -

DWN BY:	EMK	DATE DWN:	1/29/18
APR BY:		DATE APR:	
APR BY:		DATE APR:	

CONFIDENTIAL:
ALL DESIGN RIGHTS RESERVED
THE INFORMATION, DATA, DESIGN, AND DRAWINGS EMBODIED IN THIS DOCUMENT AND ALL REPRODUCTIONS THEREOF ARE THE EXCLUSIVE PROPERTY OF DIVERSIFIED WOODCRAFTS, INC.

THESE DOCUMENTS ARE SUPPLIED WITH THE UNDERSTANDING THAT THEY WILL NOT BE DISCLOSED TO THIRD PARTIES WITHOUT WRITTEN CONSENT OF DIVERSIFIED WOODCRAFTS, INC. ANY REPRODUCTION IN PART OR WHOLE WITHOUT WRITTEN CONSENT IS SUBJECT TO LEGAL ACTION.

TITLE:
MOBILE LAB UNITS
TOOLS AND ASSEMBLY COMPONENTS

DRAWING NUMBER:	SCALE:	SHEET:	REVISION:
MOBILE LAB UNITS	NTS	2 OF 7	REV A

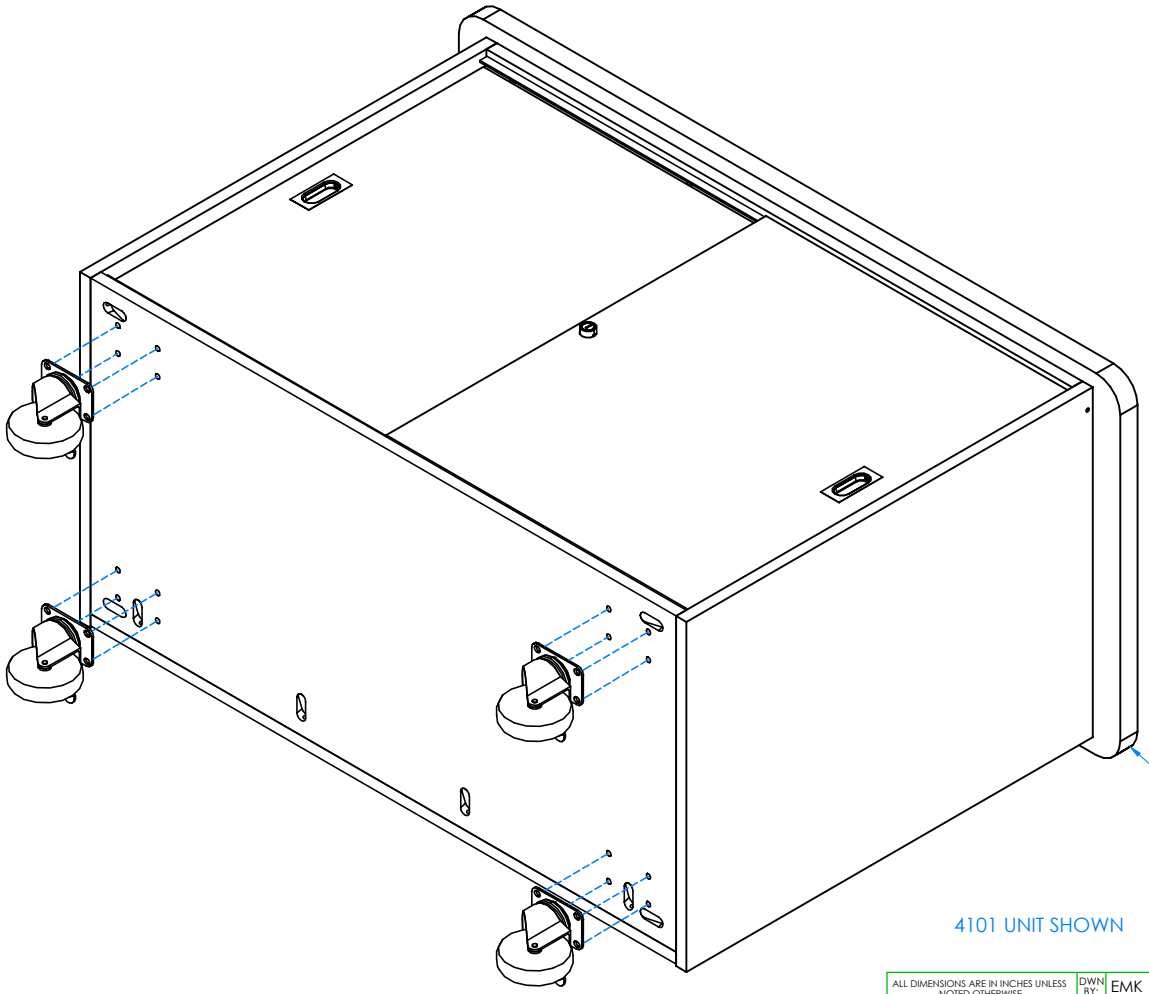

STEP 1:

- IF YOUR CABINET COMES WITH CASTERS INSTALLED, SKIP TO STEP 2.
- LAY CABINET ON ITS BACK.
- ATTACH CASTERS FROM INSIDE CABINET USING HARDWARE PROVIDED.

NOTE
BE SURE CABINET IS ON A CLEAN SURFACE TO PREVENT DAMAGE

4101 UNIT SHOWN

NOTE:

1. TO REMOVE SLIDING DOORS - SLIDE DOORS TO ONE SIDE. REMOVE EXPOSED SCREWS FROM TOP RAIL. SLIDE DOORS TO OPPOSITE SIDE AND REMOVE REMAINING SCREWS. TILT DOORS AND RAIL OUT. REPEAT STEPS ABOVE IN REVERSE TO PUT DOORS BACK ON.

REV.	DESCRIPTION	DATE	NAME	ECN NO.
A	CREATED ASSEMBLY INSTRUCTIONS	1/29/18	EMK	-

REVISION LEVEL

ALL DIMENSIONS ARE IN INCHES UNLESS NOTED OTHERWISE	DWN BY: EMK	DATE DWN:	1/29/18
CABINET SQUARENESS = ± .0625 FRACTIONAL VALUES = ± 1/32" - ALL VALUES ± OVERALL -	APR BY:	DATE APR:	
	APR BY:	DATE APR:	

CONFIDENTIAL:
ALL DESIGN RIGHTS RESERVED
THE INFORMATION, DATA, DESIGN, AND DRAWINGS EMBODIED IN THIS DOCUMENT AND ALL REPRODUCTIONS THEREOF ARE THE EXCLUSIVE PROPERTY OF DIVERSIFIED WOODCRAFTS, INC.

THESE DOCUMENTS ARE SUPPLIED WITH THE UNDERSTANDING THAT THEY WILL NOT BE DISCLOSED TO THIRD PARTIES WITHOUT WRITTEN CONSENT OF DIVERSIFIED WOODCRAFTS, INC. ANY REPRODUCTION IN PART OR WHOLE WITHOUT WRITTEN CONSENT IS SUBJECT TO LEGAL ACTION.

TITLE:
MOBILE LAB UNITS
ASSEMBLY INSTRUCTIONS

DRAWING NUMBER:	SCALE:	SHEET:	REVISION:
MOBILE LAB UNITS	NTS	3 OF 7	REV A

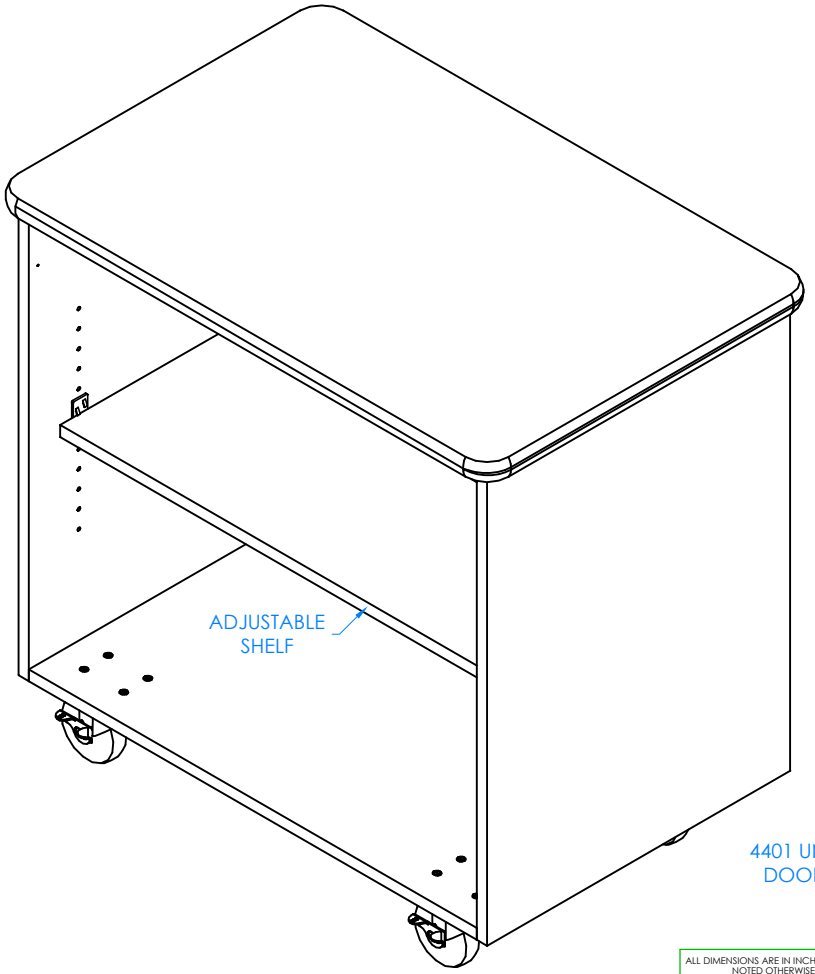

4401 UNIT SHOWN WITH ADJUSTABLE SHELF
DOORS AND HARDWARE REMOVED TO
SHOW CLARITY

STEP 2:

- TIP CABINET UP.
- IF YOUR UNIT DOES NOT HAVE AN ADJUSTABLE SHELF, SKIP TO STEP 3.
- INSERT SHELF CLIPS IN DESIRED LOCATION.
- PLACE SHELF ON CLIPS, MAKING SURE IT IS LEVEL.

NOTE:

1. TO REMOVE SLIDING DOORS - SLIDE DOORS TO ONE SIDE. REMOVE EXPOSED SCREWS FROM TOP RAIL. SLIDE DOORS TO OPPOSITE SIDE AND REMOVE REMAINING SCREWS. TILT DOORS AND RAIL OUT. REPEAT STEPS ABOVE IN REVERSE TO PUT DOORS BACK ON.

REV.	DESCRIPTION	DATE	NAME	ECN NO.
A	CREATED ASSEMBLY INSTRUCTIONS	1/29/18	EMK	-
REVISION LEVEL				

ALL DIMENSIONS ARE IN INCHES UNLESS NOTED OTHERWISE

CABINET SQUARENESS = ± .0625
FRACTIONAL VALUES = ± 1/32"
- ALL VALUES ± OVERALL -

DWN BY:	EMK	DATE DWN:	1/29/18
APR BY:		DATE APR:	
APR BY:		DATE APR:	

CONFIDENTIAL:
ALL DESIGN RIGHTS RESERVED
THE INFORMATION, DATA, DESIGN, AND DRAWINGS EMBODIED IN THIS DOCUMENT AND ALL REPRODUCTIONS THEREOF ARE THE EXCLUSIVE PROPERTY OF DIVERSIFIED WOODCRAFTS, INC.

THESE DOCUMENTS ARE SUPPLIED WITH THE UNDERSTANDING THAT THEY WILL NOT BE DISCLOSED TO THIRD PARTIES WITHOUT WRITTEN CONSENT OF DIVERSIFIED WOODCRAFTS, INC. ANY REPRODUCTION IN PART OR WHOLE WITHOUT WRITTEN CONSENT IS SUBJECT TO LEGAL ACTION.

TITLE:
MOBILE LAB UNITS
ASSEMBLY INSTRUCTIONS

DRAWING NUMBER:	SCALE:	SHEET:	REVISION:
MOBILE LAB UNITS	NTS	4 OF 7	REV A

IN HOUSE ASSEMBLY TEMPLATE

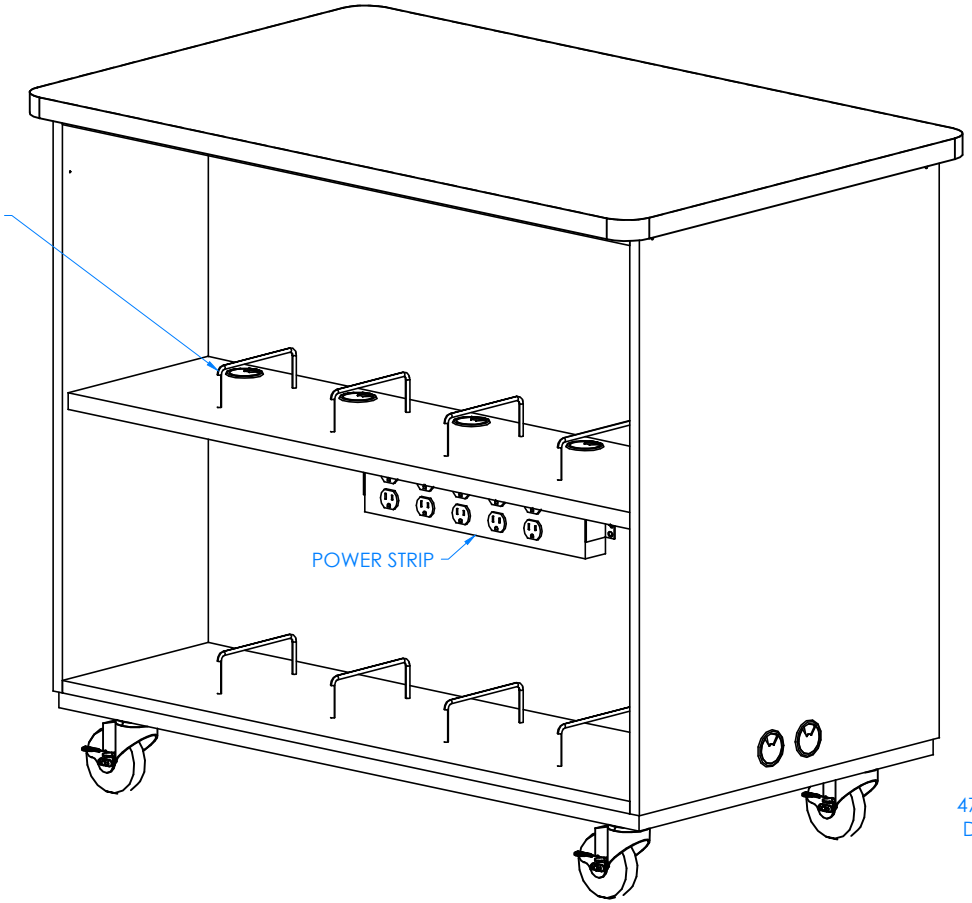

4701 UNIT SHOWN WITH MICROSCOPE DIVIDERS DOORS AND HARDWARE REMOVED TO SHOW CLARITY

STEP 3:

- IF YOUR UNIT DOES NOT HAVE MICROSCOPE DIVIDERS, SKIP TO STEP 4.
- ATTACH MICROSCOPE DIVIDERS TO SHELF.
- PLUG IN POWER STRIP TO OUTLET (4741).

NOTE:

1. TO REMOVE SLIDING DOORS - SLIDE DOORS TO ONE SIDE. REMOVE EXPOSED SCREWS FROM TOP RAIL. SLIDE DOORS TO OPPOSITE SIDE AND REMOVE REMAINING SCREWS. TILT DOORS AND RAIL OUT. REPEAT STEPS ABOVE IN REVERSE TO PUT DOORS BACK ON.

REV.	DESCRIPTION	DATE	NAME	ECN NO.
A	CREATED ASSEMBLY INSTRUCTIONS	1/29/18	EMK	-
REVISION LEVEL				

ALL DIMENSIONS ARE IN INCHES UNLESS NOTED OTHERWISE

CABINET SQUARENESS = ± .0625
FRACTIONAL VALUES = ± 1/32"
- ALL VALUES ± OVERALL -

DWN BY:	EMK	DATE DWN:	1/29/18
APR BY:		DATE APR:	
APR BY:		DATE APR:	

CONFIDENTIAL:
ALL DESIGN RIGHTS RESERVED
THE INFORMATION, DATA, DESIGN, AND DRAWINGS EMBODIED IN THIS DOCUMENT AND ALL REPRODUCTIONS THEREOF ARE THE EXCLUSIVE PROPERTY OF DIVERSIFIED WOODCRAFTS, INC.

THESE DOCUMENTS ARE SUPPLIED WITH THE UNDERSTANDING THAT THEY WILL NOT BE DISCLOSED TO THIRD PARTIES WITHOUT WRITTEN CONSENT OF DIVERSIFIED WOODCRAFTS, INC. ANY REPRODUCTION IN PART OR WHOLE WITHOUT WRITTEN CONSENT IS SUBJECT TO LEGAL ACTION.

TITLE:
MOBILE LAB UNITS
ASSEMBLY INSTRUCTIONS

DRAWING NUMBER:	SCALE:	SHEET:	REVISION:
MOBILE LAB UNITS	NTS	5 OF 7	REV A

IN HOUSE ASSEMBLY TEMPLATE

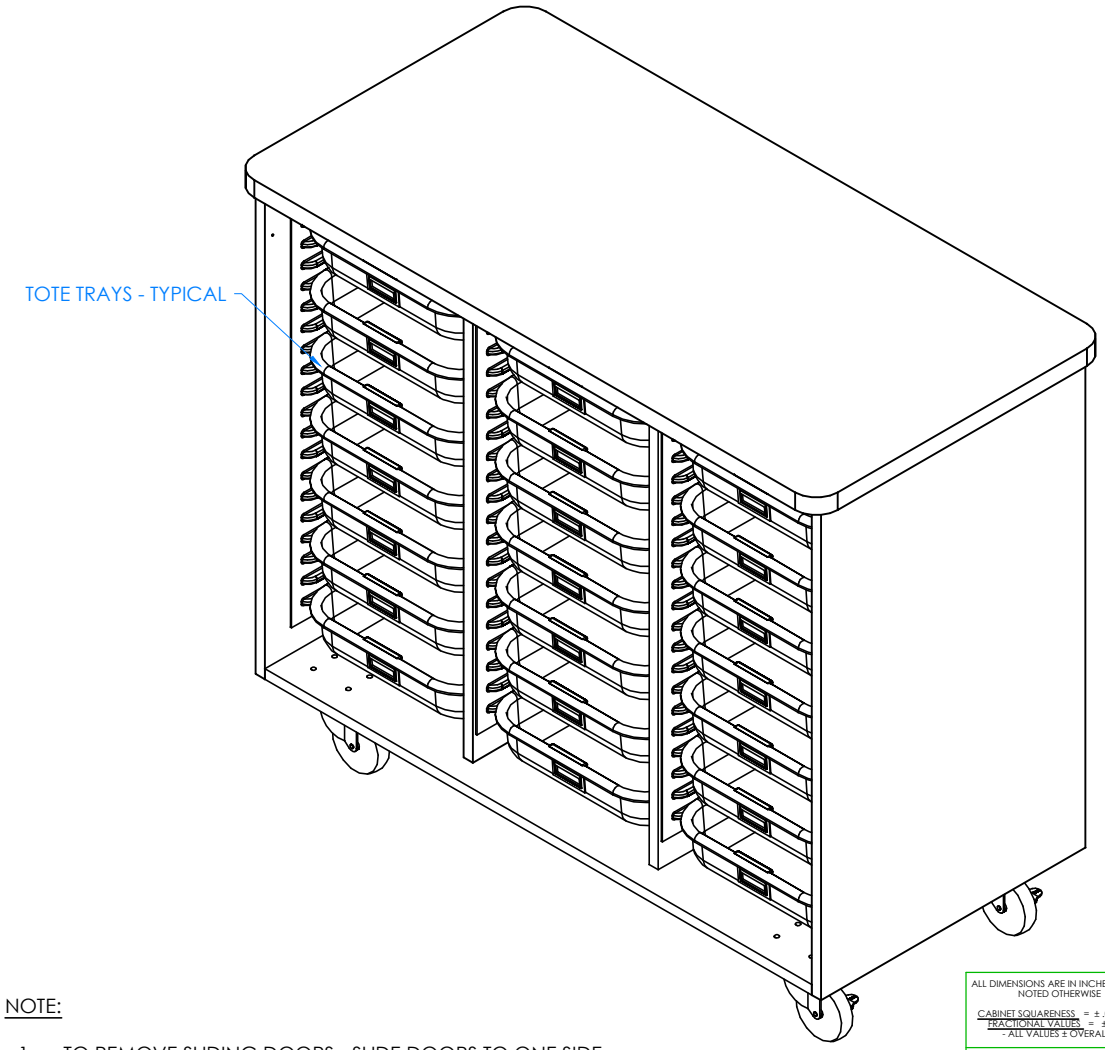

4901 UNIT SHOWN WITH TOTE TRAYS
DOORS AND HARDWARE REMOVED TO
SHOW CLARITY

STEP 4:

- IF YOUR UNIT DOES NOT HAVE TOTE TRAYS, SKIP TO STEP 5.
- PLACE TOTE TRAYS IN DESIRED LOCATION.

NOTE:

1. TO REMOVE SLIDING DOORS - SLIDE DOORS TO ONE SIDE. REMOVE EXPOSED SCREWS FROM TOP RAIL. SLIDE DOORS TO OPPOSITE SIDE AND REMOVE REMAINING SCREWS. TILT DOORS AND RAIL OUT. REPEAT STEPS ABOVE IN REVERSE TO PUT DOORS BACK ON.

REV.	DESCRIPTION	DATE	NAME	ECN NO.
A	CREATED ASSEMBLY INSTRUCTIONS	1/29/18	EMK	-

REVISION LEVEL

ALL DIMENSIONS ARE IN INCHES UNLESS NOTED OTHERWISE

CABINET SQUARENESS = ± .0625
FRACTIONAL VALUES = ± 1/32"
- ALL VALUES ± OVERALL -

DWN BY:	EMK	DATE DWN:	1/29/18
APR BY:		DATE APR:	
APR BY:		DATE APR:	

CONFIDENTIAL:
ALL DESIGN RIGHTS RESERVED
THE INFORMATION, DATA, DESIGN, AND DRAWINGS EMBODIED IN THIS DOCUMENT AND ALL REPRODUCTIONS THEREOF ARE THE EXCLUSIVE PROPERTY OF DIVERSIFIED WOODCRAFTS, INC.

THESE DOCUMENTS ARE SUPPLIED WITH THE UNDERSTANDING THAT THEY WILL NOT BE DISCLOSED TO THIRD PARTIES WITHOUT WRITTEN CONSENT OF DIVERSIFIED WOODCRAFTS, INC. ANY REPRODUCTION IN PART OR WHOLE WITHOUT WRITTEN CONSENT IS SUBJECT TO LEGAL ACTION.

TITLE:
MOBILE LAB UNITS
ASSEMBLY INSTRUCTIONS

DRAWING NUMBER:	SCALE:	SHEET:	REVISION:
MOBILE LAB UNITS	NTS	6 OF 7	REV A

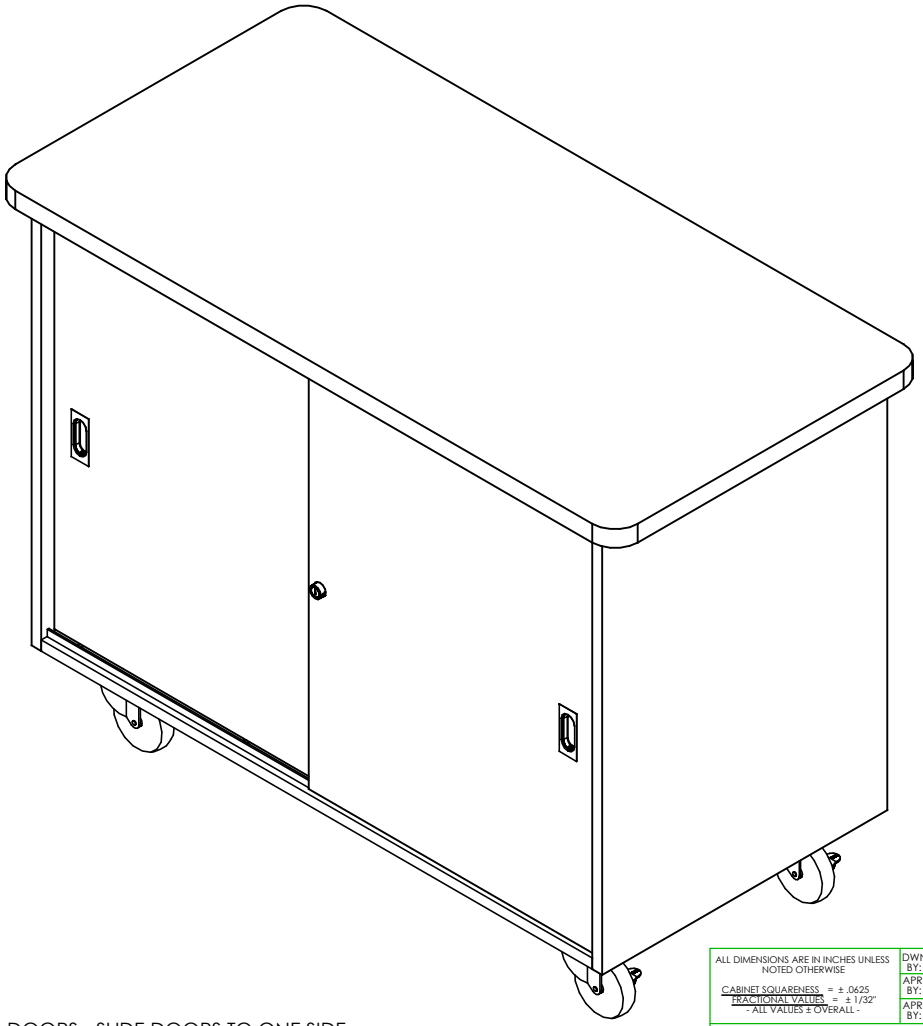

STEP 5:

SET CABINET IN DESIRED LOCATION.

COMPLETE UNIT SHOWN

NOTE:

1. TO REMOVE SLIDING DOORS - SLIDE DOORS TO ONE SIDE. REMOVE EXPOSED SCREWS FROM TOP RAIL. SLIDE DOORS TO OPPOSITE SIDE AND REMOVE REMAINING SCREWS. TILT DOORS AND RAIL OUT. REPEAT STEPS ABOVE IN REVERSE TO PUT DOORS BACK ON.

REV.	DESCRIPTION	DATE	NAME	ECN NO.
A	CREATED ASSEMBLY INSTRUCTIONS	1/29/18	EMK	-

REVISION LEVEL

ALL DIMENSIONS ARE IN INCHES UNLESS NOTED OTHERWISE

CABINET SQUARENESS = ± .0625
FRACTIONAL VALUES = ± 1/32"
- ALL VALUES ± OVERALL -

DWN BY:	EMK	DATE DWN:	1/29/18
APR BY:		DATE APR:	
APR BY:		DATE APR:	

CONFIDENTIAL:
ALL DESIGN RIGHTS RESERVED
THE INFORMATION, DATA, DESIGN, AND DRAWINGS EMBODIED IN THIS DOCUMENT AND ALL REPRODUCTIONS THEREOF ARE THE EXCLUSIVE PROPERTY OF DIVERSIFIED WOODCRAFTS, INC.

THESE DOCUMENTS ARE SUPPLIED WITH THE UNDERSTANDING THAT THEY WILL NOT BE DISCLOSED TO THIRD PARTIES WITHOUT WRITTEN CONSENT OF DIVERSIFIED WOODCRAFTS, INC. ANY REPRODUCTION IN PART OR WHOLE WITHOUT WRITTEN CONSENT IS SUBJECT TO LEGAL ACTION.

TITLE:
MOBILE LAB UNITS
ASSEMBLY INSTRUCTIONS

DRAWING NUMBER:	SCALE:	SHEET:	REVISION:
MOBILE LAB UNITS	NTS	7 OF 7	REV A